THIS DRAWING IS LOANED WITHOUT OTHER CONSIDERATION THAN THE AGREEMENT AND CONDITION THAT IT IS NOT TO BE REPRODUCED, COPIED, OR OTHERWISE DISPOSED OF, DIRECTLY OR INDIRECTLY, AND IS NOT TO BE USED IN WHOLE OR IN PART TO ASSIST IN MAKING OR TO FURNISH ANY INFORMATION FOR THE MAKING OF DRAWINGS, PRINTS, APPARATUS, OR PARTS THEREOF.

REVISIONS				
ZONE	LTR	DESCRIPTION	DATE	APPROVED

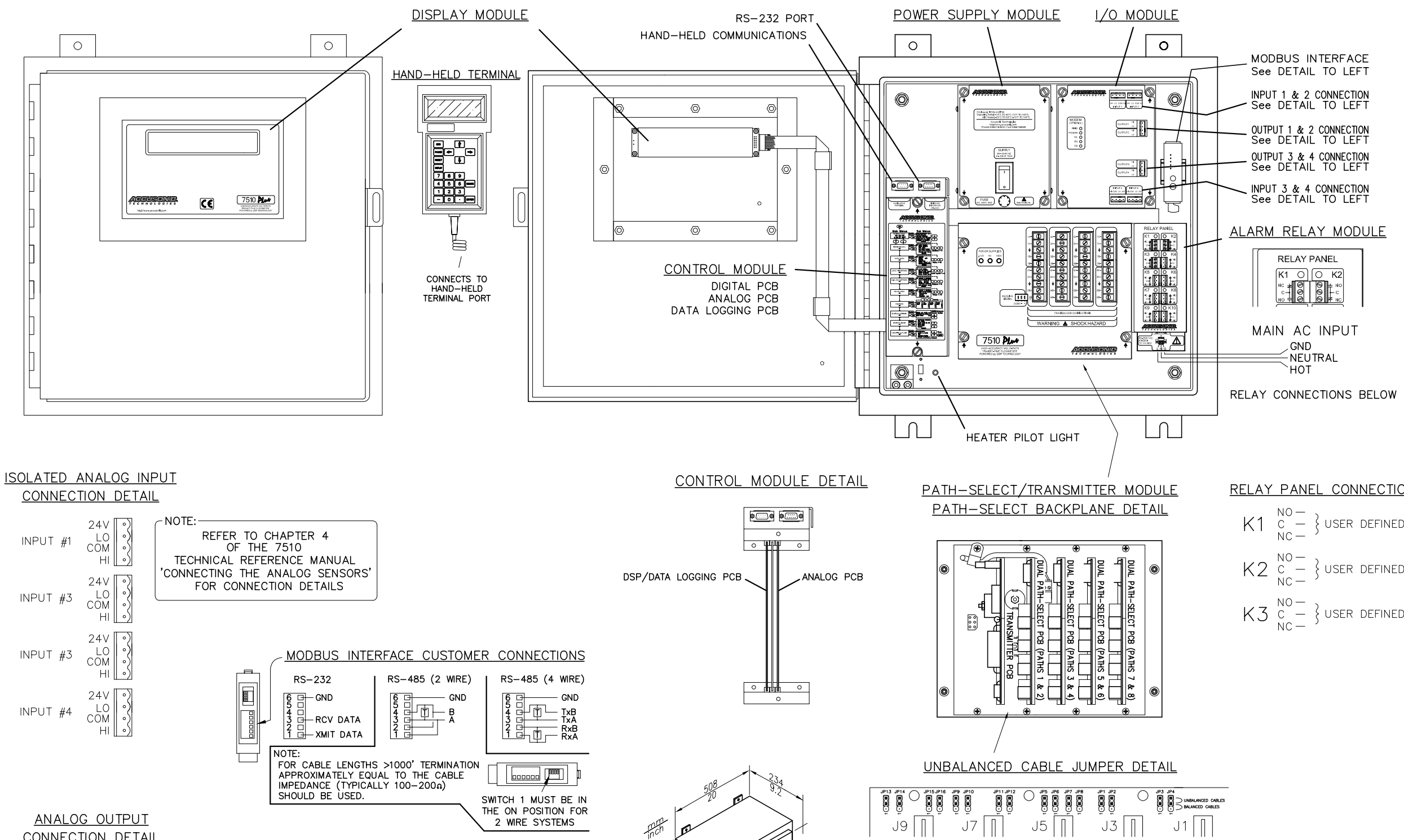

ISOLATED ANALOG INPUT CONNECTION DETAIL

NOTE:
REFER TO CHAPTER 4 OF THE 7510 TECHNICAL REFERENCE MANUAL 'CONNECTING THE ANALOG SENSORS' FOR CONNECTION DETAILS

MODBUS INTERFACE CUSTOMER CONNECTIONS

NOTE:
FOR CABLE LENGTHS >1000' TERMINATION APPROXIMATELY EQUAL TO THE CABLE IMPEDANCE (TYPICALLY 100–200Ω) SHOULD BE USED.

ANALOG OUTPUT CONNECTION DETAIL

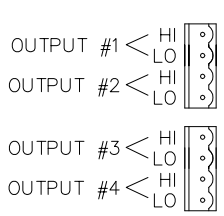

NOTE:
REFER TO CHAPTER 7 OF THE 7510 TECHNICAL REFERENCE MANUAL 'RELAY PARAMETERS' FOR CONFIGURATION DETAILS

CONTROL MODULE DETAIL

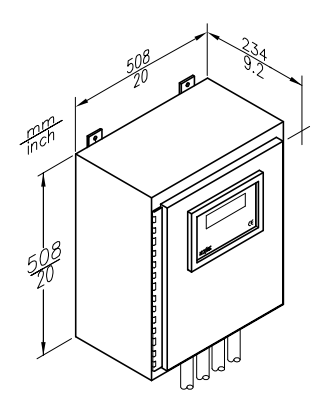

PATH-SELECT/TRANSMITTER MODULE PATH-SELECT BACKPLANE DETAIL

UNBALANCED CABLE JUMPER DETAIL

RELAY PANEL CONNECTIONS

K1 NO — C — NC — } USER DEFINED

K2 NO — C — NC — } USER DEFINED

K3 NO — C — NC — } USER DEFINED

UNLESS OTHERWISE SPECIFIED DIMENSIONS ARE IN INCHES	CONTRACT NO.	ACCUSONIC TECHNOLOGIES	28 Patterson Brook Rd, Unit 1 W. Wareham, MA 02576 TEL: (508) 273-9600 FAX: (508) 273-9699
TOLERANCES ON: DECIMALS .X ±___ .XX ±___ .XXX ±___	DRAWN Apollo — DATE 10/25/05	TITLE	MODEL 7510Plus NEMA 4X FLOWMETER
ANGLES ±___ ___	CHECKED		
FRACTIONS ±___	ENGINEER		
SURFACE ROUGHNESS ✓	APPROVED		
MATERIAL	FILENAME 7510Plus.DWG	SIZE C — CODE IDENT. NO. 25993 — DWG. NO. 7510Plus — REV. 00	
		SCALE NONE — WT. LBS. NA	SHEET 1 OF 1

NOT A CONTROLLED DOCUMENT UNLESS MARKED CONTROLLED